FIRE/RESCUE GARAGE DRAINAGE IMPROVEMENTS

KI SAWYER AIRPORT SERVICE CENTER, MARQUETTE COUNTY, MI
NOT FOR CONSTRUCTION

SOURCE:
STATE OF MICHIGAN HIGHWAY AND COUNTY ROAD MAP

STATE or COUNTY MAP
(NOT TO SCALE)

SOURCE:
GOOGLE EARTH 2019

SITE LOCATION MAP
(NOT TO SCALE)

SHEET INDEX

SHEET NO.	DRAWING NO.	TITLE
1	G-01	COVER SHEET
2	C-01	BASE MAP
3	C-02	PROPOSED UNDERGROUND STORAGE
4	D-01	UNDERGROUND STORAGE DETAILS

PREPARED FOR:

MARQUETTE COUNTY
125 AVENUE G
GWINN, MI 49841
(906)346-3308

PREPARED BY:

GEI CONSULTANTS OF MICHIGAN, P.C.
109 W. BARAGA AVENUE
MARQUETTE, MI 49855
(906)451-4021

GEI Consultants

NOT FOR CONSTRUCTION

NO.	DATE	ISSUE/REVISION	APP
2	5/11/2020	NFC	GMM
1	4/27/2020	NOT FOR CONSTRUCTION (NFC)	GMM
0	4/7/2020	BASE MAP	GMM

DRAFT

DWG. NO.
G-001

SHEET NO.
1 OF 4

THIS DOCUMENT, AND THE IDEAS AND DESIGNS INCORPORATED HEREIN, IS AN INSTRUMENT OF PROFESSIONAL SERVICE, IS THE PROPERTY OF GEI CONSULTANTS AND IS NOT TO BE USED, IN WHOLE OR IN PART, FOR ANY OTHER PROJECT WITHOUT THE WRITTEN AUTHORIZATION OF GEI CONSULTANTS.

GEI PROJECT NO. 2001614

\\MQT2L-GFREN: W:\Marquette_County\Sawyer\2001614_KI_Sawyer_Fire-Rescue_Garage\00_CAD\Design\BASE_Existing.dwg - 4/27/2020

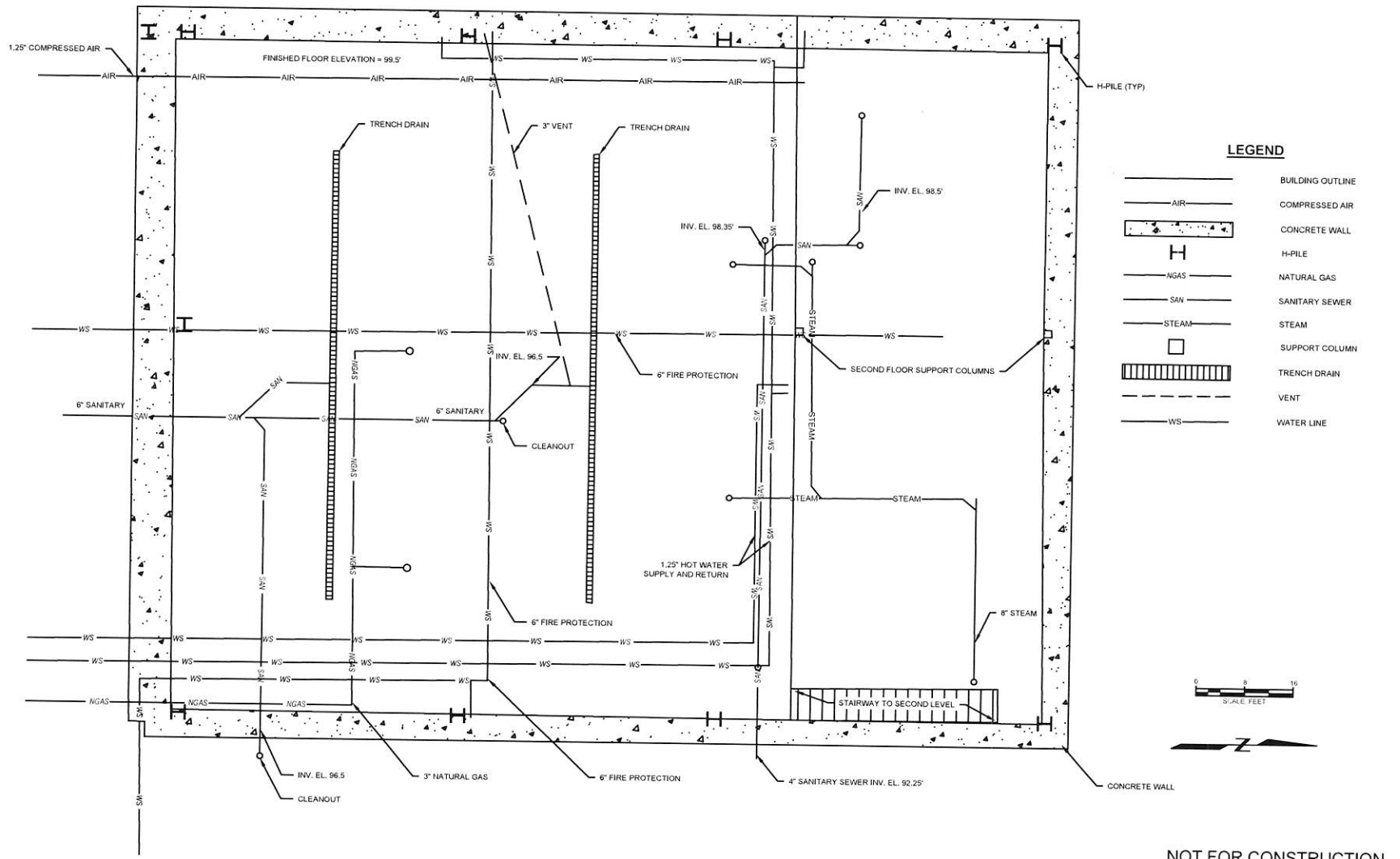

NOT FOR CONSTRUCTION

GEI Consultants
GEI CONSULTANTS OF MICHIGAN, P.C.
108 W. BARAGA AVENUE
MARQUETTE, MI 49855
(906)451-4021

Marquette County
125 Avenue G
Gwinn, MI 49841

KI Sawyer
Fire/Rescue Garage
125 Avenue G
Gwinn, MI 49841

Attention:
If this scale bar does not measure 1" then drawing is not original scale.

NO.	DATE	ISSUE/ REVISION	APP
2	5/11/2020	NFC	GMM
1	4/27/2020	NFC	GMM
0	4/7/2020	BASE MAP	GMM

Designed: SHP
Checked: GMM
Drawn: SHP
Approved By: GMM

BASE MAP

GEI Project 2001614
DWG. NO.
C-01
SHEET NO.
2

\\MQT2L-SPREN W:\Marquette_County\Sawyer\2001614_KI_Sawyer_FireRescue_Garage\00_CAD\Design\BASE_Existing.dwg - 4/27/2020

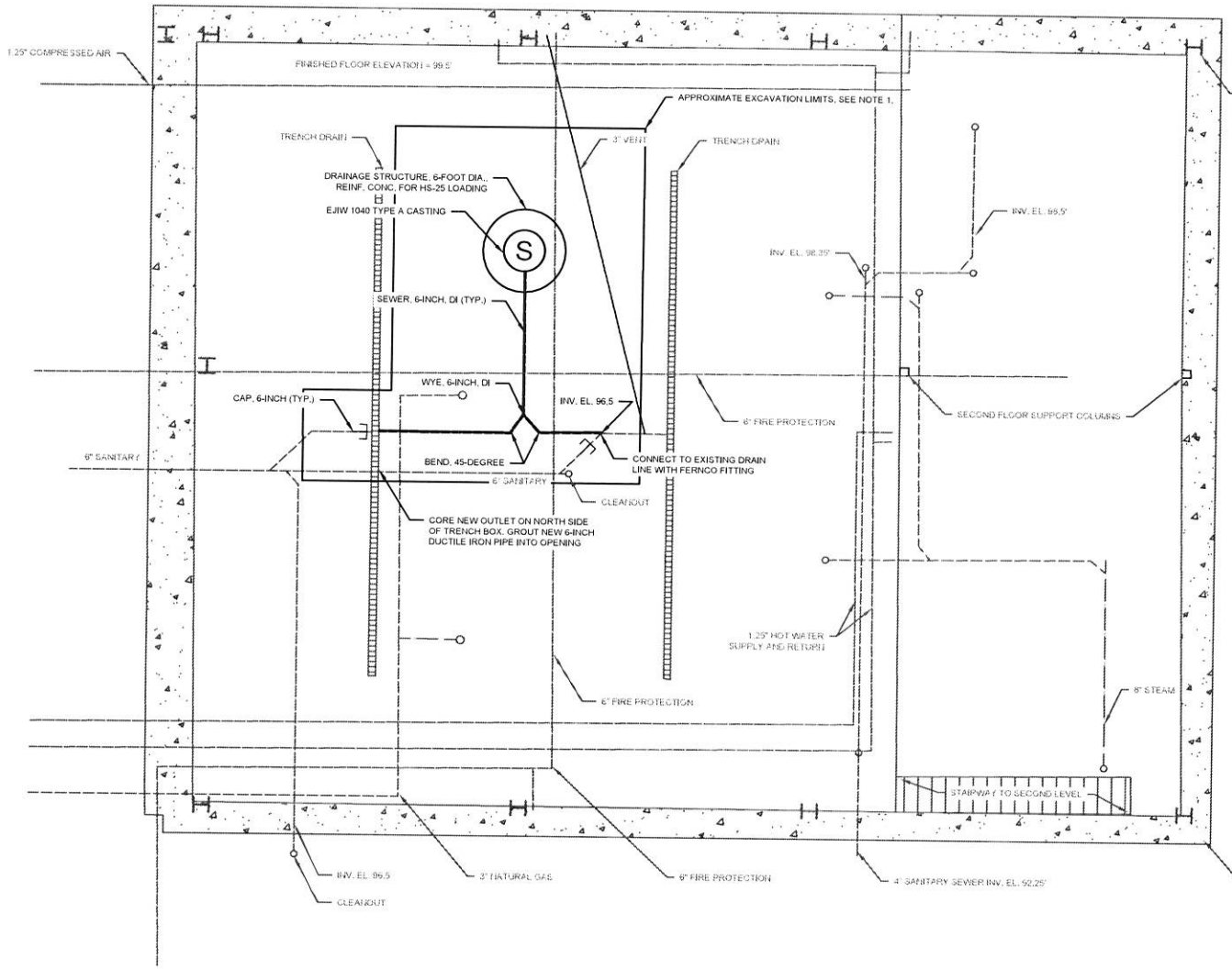

LEGEND

	BUILDING OUTLINE
AIR	COMPRESSED AIR
	CONCRETE WALL
H	H-PILE
NGAS	NATURAL GAS
SAN	SANITARY SEWER
STEAM	STEAM
	SUPPORT COLUMN
	TRENCH DRAIN
	VENT
WS	WATER LINE
	APPROXIMATE EXCAVATION LIMITS
	BOTTOM OF PROPOSED UNDERGROUND STORAGE
SAN	PROPOSED SANITARY CONNECTION
E	PROPOSED SANITARY CAP

NOTES:

1. CONTRACTOR SHALL LOCATE ALL UTILITIES PRIOR TO EXCAVATION.
2. UTILITIES SHOWN ARE AS DEPICTED IN RECORD DRAWINGS. THEIR LOCATION AND DEPTH ARE FOR REFERENCE ONLY. CONTRACTOR MUST FIELD VERIFY ALL UTILITY LOCATIONS WITHIN INFLUENCE OF CONSTRUCTION.

0 8 16
SCALE FEET

N

NOT FOR CONSTRUCTION

GEI Consultants
GEI CONSULTANTS OF MICHIGAN, P.C.
708 W. BARAGA AVENUE
MARQUETTE, MI 49855
(906)451-4021

Marquette County
125 Avenue G
Gwinn, MI 49841

KI Sawyer
Fire/Rescue Garage
125 Avenue G
Gwinn, MI 49841

Attention:
0 1"
If this scale bar does not measure 1" then drawing is not original scale.

NO.	DATE	ISSUE/ REVISION	APP
2	5/11/2020	NFC	GMM
1	4/27/2020	NFC	GMM
0	4/7/2020	BASE MAP	GMM

Designed:	SHP
Checked:	GMM
Drawn:	SHP
Approved By:	GMM

PROPOSED UNDERGROUND STORAGE

GEI Project 2001614
DWG. NO.
C-02
SHEET NO.
3

\\MOT2L-SPREN W:\Marquette_County\Sawyer\2001614_KI_Sawyer_Fire-Rescue_Garage\00_CAD\Design\BASE_Existing.dwg - 4/27/2020

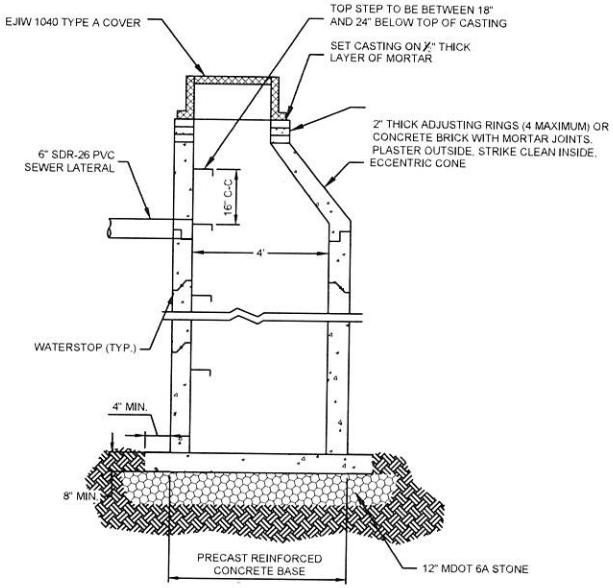

TANK STRUCTURE DETAIL

NO SCALE

NOTES:
1. DRAINAGE STRUCTURE SHALL MEET OR EXCEED HS-25 LOADING REQUIREMENTS.

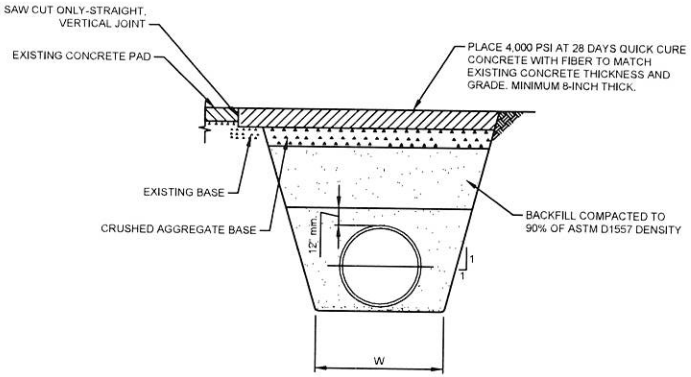

PIPE TRENCH

NO SCALE

NOT FOR CONSTRUCTION

GEI Consultants
GEI CONSULTANTS OF MICHIGAN, P.C.
109 W. BARAGA AVENUE
MARQUETTE, MI 49855
(906) 451-4021

Marquette County
125 Avenue G
Gwinn, MI 49841

KI Sawyer
Fire/Rescue Garage
125 Avenue G
Gwinn, MI 49841

Attention:
0 1"
If this scale bar does not measure 1" then drawing is not original scale.

NO.	DATE	ISSUE/ REVISION	APP
2	5/11/2020	NFC	GMM
1	4/27/2020	NFC	GMM
0	4/7/2020	BASE MAP	GMM

Designed:	SHP
Checked:	GMM
Drawn:	SHP
Approved By:	GMM

UNDERGROUND STORAGE DETAILS

GEI Project 2001614
DWG. NO.
D-01
SHEET NO.
4

WIGT2L-SPREN W:\Marquette_County\Sawyer\2001614_KI_Sawyer_Fire-Rescue_Garage\80_CAD\Design\BASE_Existing.dwg - 4/27/2020

WALL TYPE LEGEND

- CONCRETE MASONRY UNITS (CMU)
- FURRED GPDW ON CMU
- STUD PARTITION
- ONE HOUR SMOKE BARRIER (UL U465 OR U905)
- ONE HOUR FIRE BARRIER (UL U465 OR U905)
- TWO HOUR FIRE BARRIER (UL U411 OR U905)
- TWO HOUR FIRE/SMOKE BARRIER (UL U411 OR U905)

A — 3 5/8" METAL STUDS AT 16"O.C. WITH ONE (1) LAYER OF 5/8" GPDW ON EACH SIDE. EXTEND STUDS AND GPDW TO ROOF OR FLOOR DECK ABOVE.

A1 — SAME AS "A" ABOVE WITH THE ADDITION OF 3" SOUND ATTENUATION BLANKETS BETWEEN STUDS FULL HEIGHT.

A2 — SAME AS "A" ABOVE EXTEND 8" ABOVE CEILING.

B — 3 5/8" METAL STUDS AT 16"O.C. WITH ONE (1) LAYER OF 5/8" TYPE "X" GPDW ON EACH SIDE. EXTEND STUDS AND GPDW UP TO ROOF OR FLOOR DECK ABOVE. 1-HOUR RATED WALL. UL DESIGN No. U465.

B1 — SAME AS "B" ABOVE WITH THE ADDITION OF 3" SOUND ATTENUATION BLANKETS BETWEEN STUDS FULL HEIGHT.

C — 3 5/8" METAL STUDS AT 16"O.C. WITH TWO (2) LAYERS OF 5/8" TYPE "X" GPDW ON EACH SIDE. EXTEND STUDS AND GPDW UP TO ROOF OR FLOOR DECK ABOVE. 2-HOUR RATED WALL. UL DESIGN No. U411.

C1 — SAME AS "C" ABOVE WITH THE ADDITION OF 3" SOUND ATTENUATION BLANKETS BETWEEN STUDS FULL HEIGHT.

D — 3 5/8" METAL STUDS AT 16"O.C. WITH ONE (1) LAYER OF 5/8" GPDW ON ONE SIDE ONLY AND 3" SOUND ATTENUATION BLANKETS. EXTEND STUDS, GPDW AND BLANKETS UP TO ROOF OR FLOOR DECK ABOVE.

E — 3 5/8" METAL STUDS AT 16"O.C. WITH ONE (1) LAYER OF 5/8" GPDW ON ONE SIDE ONLY. EXTEND WALL TO 8" ABOVE CEILING.

F — ONE (1) LAYER 5/8" GPDW ON 1 1/2" METAL FURRING AT 16"O.C. WITH 1 1/2" RIGID INSULATION ON ONE SIDE OF CMU WALL. EXTEND CMU, INSULATION, AND GPDW TO ROOF OR FLOOR DECK ABOVE.

F1 — SAME AS "F" ABOVE EXCEPT INSTALLED ON EXTERIOR CONCRETE WALL PANEL.

F2 — SAME AS "F" ABOVE EXCEPT WITHOUT 1 1/2" RIGID INSULATION AND EXTEND GPDW TO 8" ABOVE CEILING.

F3 — SAME AS "F" ABOVE EXCEPT FURRING 2 x 4 WOOD STUDS LAYED FLAT.

G — 6" CMU WALL. EXTEND WALL TO ROOF OR FLOOR DECK ABOVE.

H — 6" CMU WALL. EXTEND WALL TO 8" ABOVE CEILING.

J — 8" CMU WALL. EXTEND WALL TO 8" ABOVE CEILING.

K — 12" CMU WALL. FILL CORES WITH CORE FILL INSULATION. EXTEND WALL TO ROOF OR FLOOR DECK ABOVE.

K1 — 12" CMU WALL. EXTEND WALL TO ROOF OR FLOOR DECK ABOVE.

L — 8" CMU WALL. FILL CORES WITH CORE FILL INSULATION. EXTEND WALL TO ROOF OR FLOOR DECK ABOVE.

NOT ALL WALL TYPES USED, REFER TO PLANS.

GENERAL NOTES

- DO NOT SCALE DRAWINGS.
- ALL WALLS SHALL EXTEND TO FLOOR OR ROOF DECK ABOVE UNLESS NOTED OTHERWISE. SEE TYPICAL DETAILS ON A6.1.
- ALL CMU WALLS ARE 8" WIDE UNLESS NOTED OTHERWISE.
- ALL WALLS ARE CENTERED ON GRIDLINES UNLESS NOTED OTHERWISE.
- PROVIDE BULLNOSE CMU AT ALL OUTSIDE CORNERS EXPOSED TO VIEW.
- ALL DIMENSIONS ARE NOMINAL UNLESS NOTED OTHERWISE.
- 1 DENOTES FRAME TYPE SHOWN ON A2.2
- COORDINATE WITH MECHANICAL AND ELECTRICAL CONTRACTORS FOR EXACT SIZES AND LOCATIONS OF 4" HIGH CONCRETE HOUSEKEEPING PADS.
- SEE STRUCTURAL DRAWINGS FOR RECESSED SLAB LOCATIONS.
- SLOPE CONCRETE SLABS TO DRAINS AT 1/8" PER FOOT (MINIMUM) TYPICAL.
- ANY ITEMS GOING THRU OR INSTALLED ON THE EXTERIOR CONCRETE WALL PANELS SHALL BE CENTERED ON THE 2'-8"x2'-8" AND 2'-8"x8'-10" GRIDS HORIZONTALLY AND VERTICALLY.

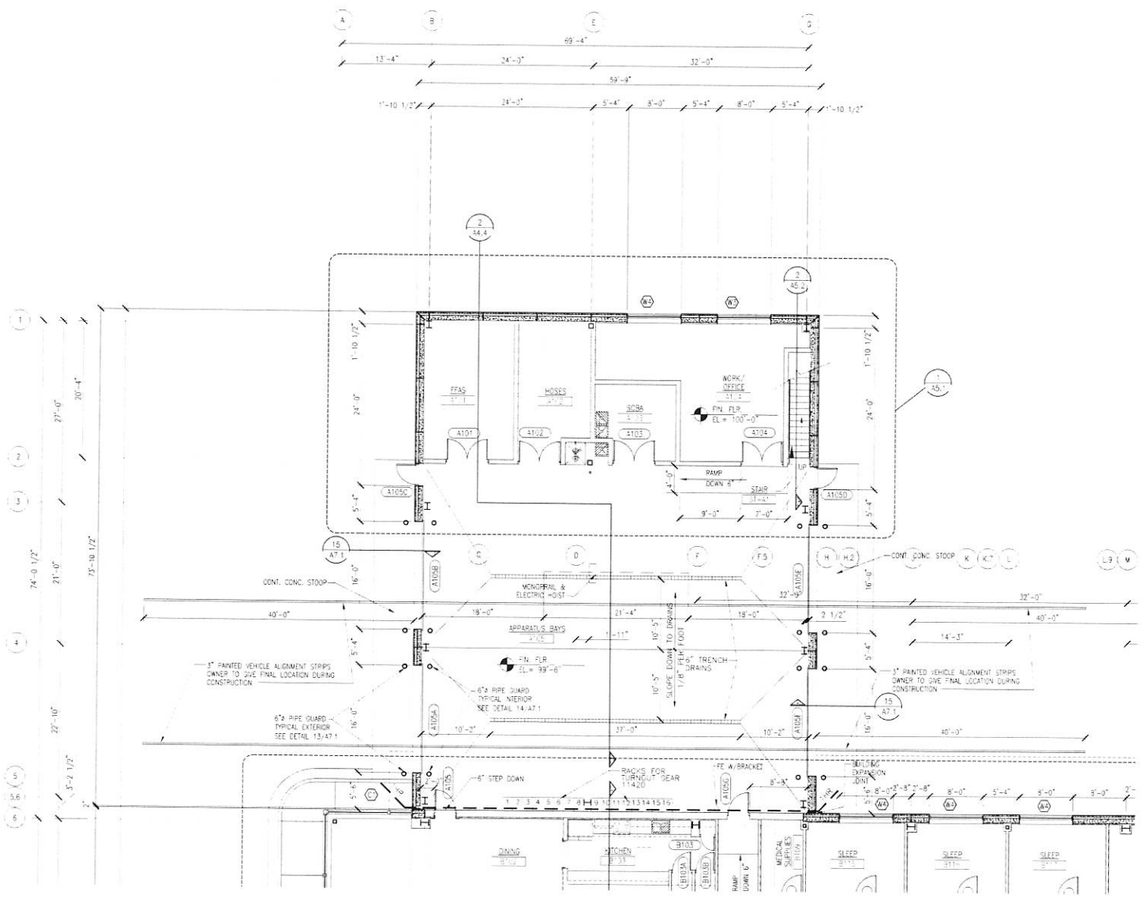

FIRST FLOOR PLAN AREA "A"

0 4' 8' 12' 16'

NORTH

GENERAL NOTE FOR ALL TRADES:

ANY ITEMS GOING THROUGH OR INSTALLED ON EXTERIOR CONCRETE WALL PANELS SHALL BE CENTERED ON THE 2'-8" x 2'-8" AND 2'-8" x 8'-0" GRIDS HORIZONTALLY AND VERTICALLY. ALL LOCATIONS TO BE APPROVED BY ARCHITECT AND THE PRECAST SUPPLIER. (THIS SHALL INCLUDE GAS LINES, VENTS, WINDOWS, FIRE PROTECTION CONNECTIONS, LIGHT FIXTURES, ETC.)

A01-ALL-TRADES-NOTE

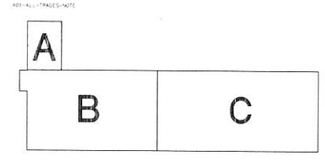

KEY PLAN

Copyright © 2003 HRS Corporation. All Rights Reserved

DATE	ISSUED FOR
12/21/2006	REVISIONS AS NOTED BY CLOUD

DA/EL 1.01.06
DR T.E.HIRA
CK A.D.FERRAZ
APP C.E.HIS
N.W.MASTERSON
IN CHARGE

HRS

GRAND RAPIDS, MI.
3950 BRYANT SE
KALAMAZOO

SAWYER INTERNATIONAL AIRPORT
GWINN, MICHIGAN

NEW SRE / ARFF BUILDING

FIRST FLOOR PLAN AREA "A" - ARCHITECTURAL

DRAWING
A1.1A

FILE
12936342